Advanced Valve Technologies

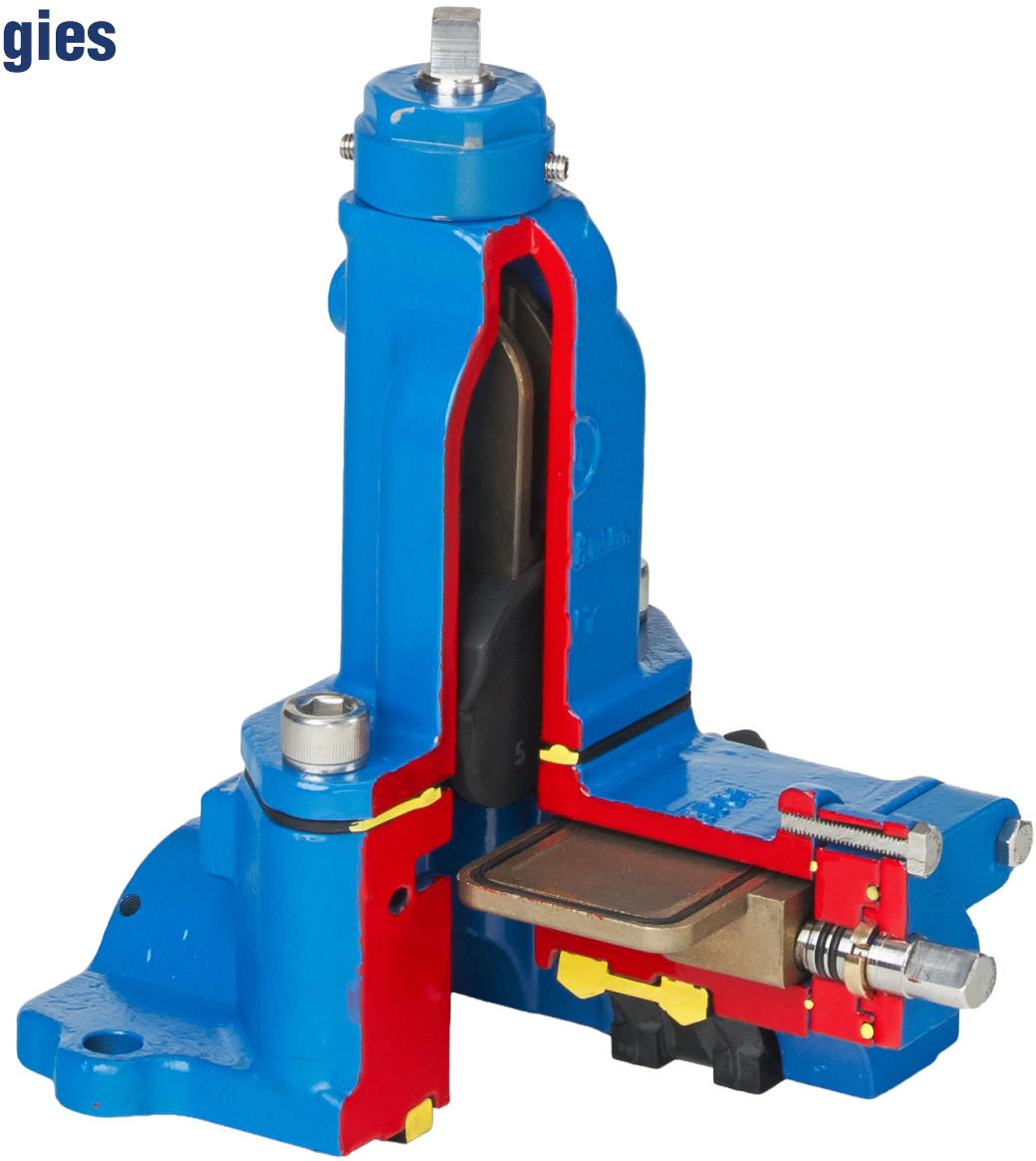

# AVT EZ VALVE

## 2” DATA SHEET

Henkel

Henkel Adhesive Technologies

# AVT EZ VALVE 2”

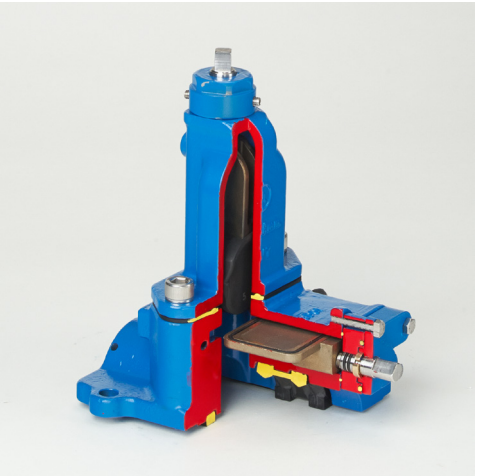

The award-winning AVT EZ Valve is the best choice for emergency repairs and the smartest solution for planned and emergency pipeline maintenance on 2”, diameter lines.

This inline insertion valve can be installed on horizontal or vertical lines. The AVT EZ Valve installs on an active line, so there is no need to turn o the water flow. This means fixing a line is fast, with fewer disruptions to businesses and residents and less cost and risk for owners and operators. On pipe diameters of 2“, these valves normally can be installed in around an hour.

Ranked among the industry’s most innovative solutions, the light and compact AVT EZ Valve is designed with a built-in isolation gate that allows the valve to be installed under pressure, a design feature that permits flow through the line while the repair is being made. It is durable, reliable, and certified to industry standards.

## BENEFITS & VALUES:

- No water shutoff required during installation
- No service interruption
- No fines for water shutoff
- No boil orders
- No customer notices
- No risk of plugging the line with a cut coupon
- No loss of pipe integrity
- Four times quicker to install than other valves on the market
- Enables one floor or area of a commercial or residential building to be isolated

## APPLICATIONS:

- High-rise buildings
- Multiple occupancy buildings
- Hospitals
- Factories
- HVAC
- Commercial buildings
- Refining and petrochemical plants
- Commercial plumbing
- Water distribution

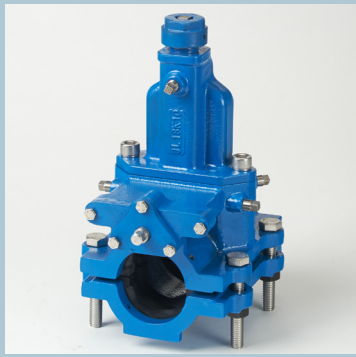

# FEATURES

### DESIGN

Unique, patented technology

Low profile design

Ductile iron castings

Integrated isolation valve

Patented multichannel double-seal gaskets conform to irregular pipe geometries and sizes

Sizes 2”

### INSTALLATION

Can be installed on all common pipe materials

Installs at any angle

Valve bonnet can be removed after a repair or remain in place as a permanent functioning valve

### SAFETY

Approved epoxy resin coated

Stainless steel fasteners for secure positioning

Rated at 100 PSI, (7 Bar)

EZ Valve Components are WRAS Certified and UL Classified to NSF/ANSI Standard 61, Drinking Water System Components - Health Effects

# INSTALL PROCESS

## 1 Prepare **Insertion Site**

Prepare insertion site by lubricating the gasket and contact areas

## 2 Lubricate **Gasket Sets & Channels**

Lubricate gasket sets and gasket channels in casting bodies

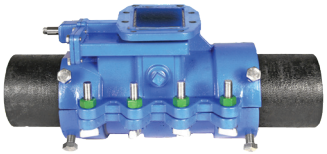

## 3 Assemble **Ductile Iron Castings**

Assemble ductile iron castings with stainless steel fasteners to accept a pressure test and temporarily allow rotation for milling

## 4 Attach **EM Machine**

Check integral isolation gate is fully open, fit rotation assembly, attach EM machine and pressure test

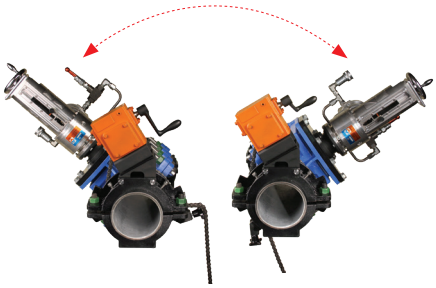

## 5 Mill A Slot Over **a 120° Path**

Maintaining system line pressure, mill a slot over a 120° path (Note: The slot normally is cut to provide for vertical valve alignment, but the installer can select any position.)

## 6 Retract The **Milling Head**

Retract the milling head, close the integral isolation gate. Replace the EM Machine with the resilient wedge bonnet, remove the rotation assembly and tighten casting fasteners to specified torque values

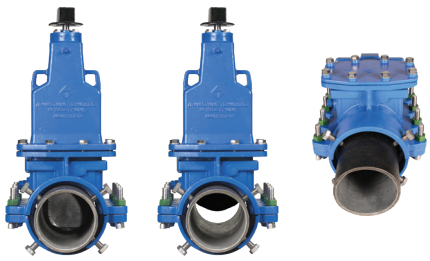

## 7 Open **and Operate**

Open the integral isolation gate and operate the AVT EZ Valve. For line stop applications, replace the valve bonnet with a blind flange using the integral isolation gate

# CUT AWAY VALVE WITH KEY

### Removable Valve Bonnet
Resilient wedge gate and actuation mechanism are contained for fast and easy installation or removal

### Gasket & Channel
Maintain system pressure while allowing rotation of casting assembly during slot-milling

### Fasteners
Stainless steel components secure casting assembly and provide final positioning on pipe

### Pipeline Compatibility
The EZ Valve design works with most metallic pipes, AC and PVC materials

### Actuator
Standard number of turns to open and close valve

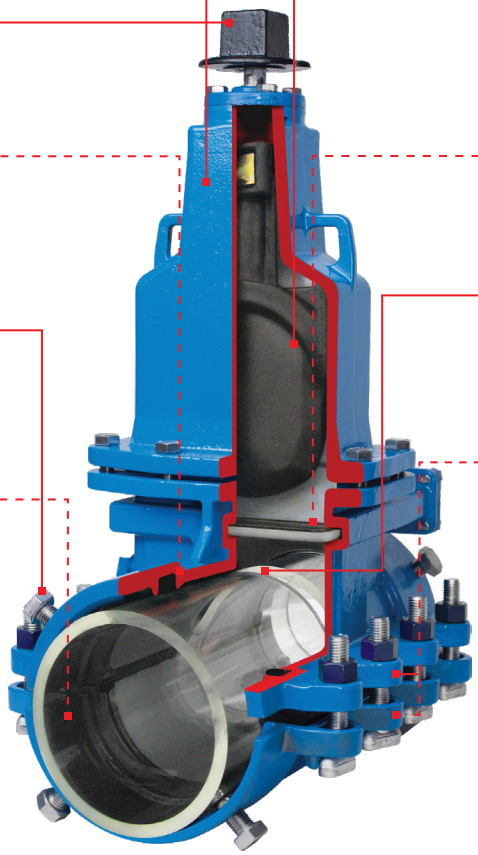

### Resilient Wedge
A wedge gate over a ductile iron frame that e ectively seals even tuberculated host pipe

### Integrated isolation valve
Provides “under pressure” installation or removal of valve bonnets or blind flanges

### Insertion Slot
One narrow slot over a 120° path maintains pipe integrity and creates resilient wedge access

### Castings
Ductile iron castings are precision machined to fit project specifications and pipe material

## 2” EZ VALVE DIMENSIONS & DIAMETRICAL RANGE

**WEIGHT**

| Size | Weight |
|---|---|
| 2” | 20lbs |

**DIAMETRICAL RANGE**

| Pipe Size | Diametrical Range |
|---|---|
| 2” | 2.20” - 2.60” |

**ROTATION CLEARANCE**

| Size | Below | Beside |
|---|---|---|
| 2” | 8” | 16” |

**SIZE**

| Size | Height (H1) | Height (H2) | Length | Width |
|---|---|---|---|---|
| 2” | 11.85” | 8.75” | 7.52” | 6.22” |

**INSTALLATION**

| Size | Clean Pipe |
|---|---|
| 2” | 34” |

Clean, joint-free length of pipe required to allow for standard EZ Valve installation

# 2” EZ VALVE SPECIFICATIONS

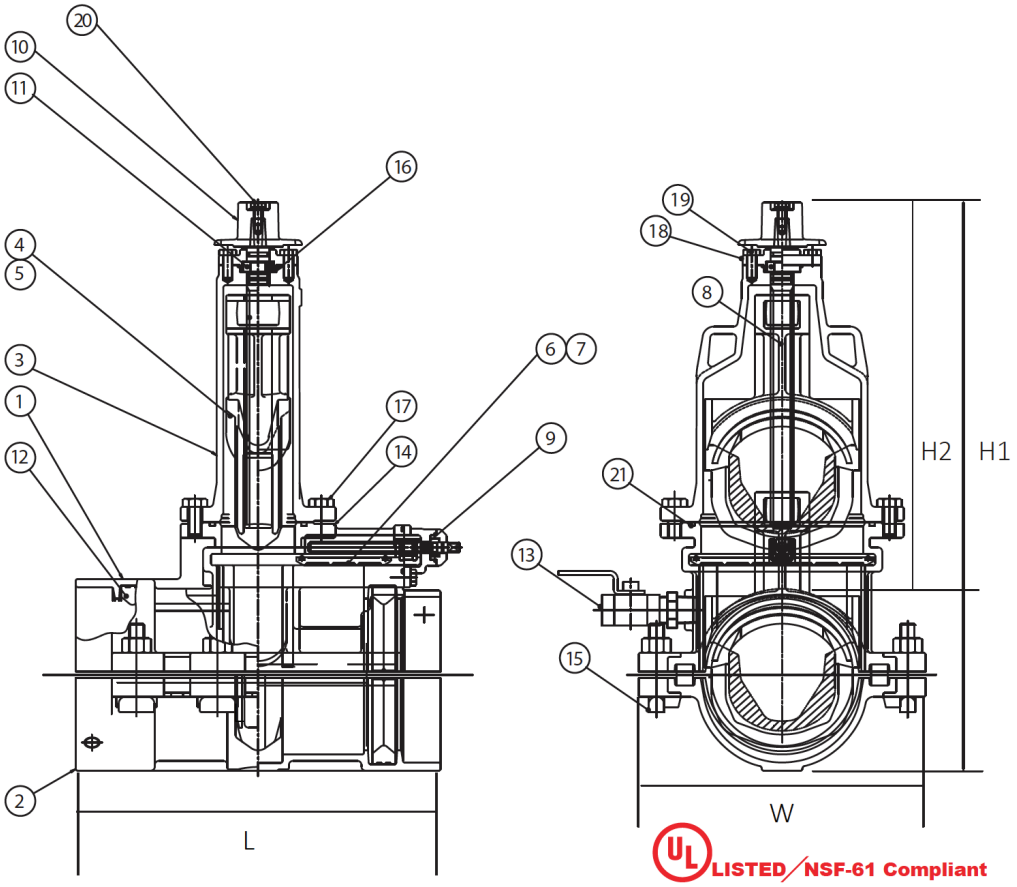


| Item No | Description | Material |
|---|---|---|
| 1 | Upper Half of Body | DUCTILE IRON |
| 2 | Bottom Half of Body | DUCTILE IRON |
| 3 | Bonnet Body | DUCTILE IRON |
| 4 | Gate | DUCTILE IRON |
| 5 | Gate Rubber | EPDM |
| 6 | Isolation Gate | DUCTILE IRON |
| 7 | Isolation Gate Rubber | EPDM |
| 8 | Stem (Feed Screw) | STAINLESS STEEL |
| 9 | Isolation Gate Stem | STAINLESS STEEL |
| 10 | Wrench Nut | DUCTILE IRON |
| 11 | Set Collar | BRASS |
| 12 | Stem Nut | BRONZE |
| 13 | Isolation Gate Stem Nut | BRONZE |
| 14 | Gasket | EPDM |
| 15 | Chip Flushing Port | |
| 16 | EM Cutting Port | |
| 17 | Sacrificial Anode Bolts/Nuts | DUCTILE IRON WITH ZINC ANODES |
| 18 | O-Rings | BUNA-N |
| 19 | Bonnet Bolts | STAINLESS STEEL |
| 20 | Packing Gland | DUCTILE IRON |
| 21 | Packing Gland Bolts | STAINLESS STEEL |
| 22 | Bolt for Wrench Nut | STAINLESS STEEL |
| 23 | Bonnet O-Ring | EPDM |

# 2” EZ VALVE SPECIFICATIONS

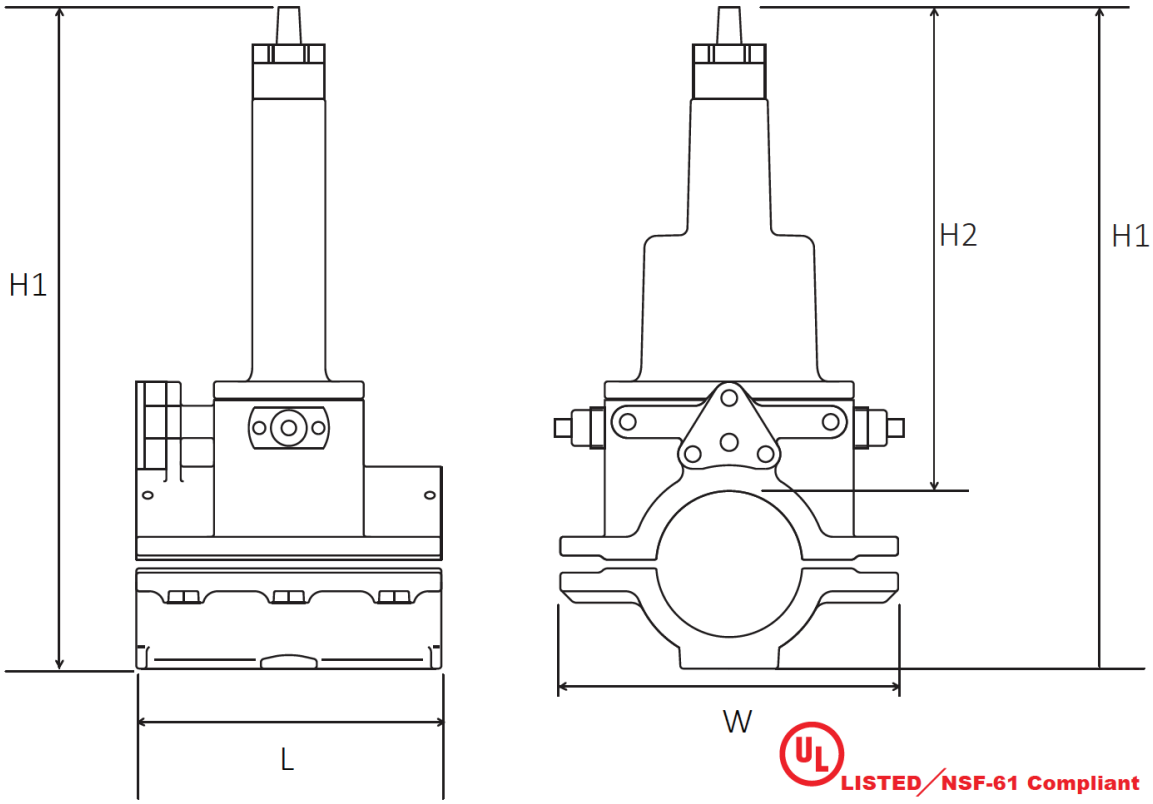


## SPECIFICATIONS

1. Bottom Half Body: DI. ASTM A536 65-45-12
2. Upper Half Body: DI. ASTM A536 65-45-12
3. Bonnet: DI. ASTM A536 65-45-12
4. Gate: Bronze C954
5. Gate Rubber Coated: EPDM ISO 4097:2014
6. Stem: Stainless Steel 17-4PH
7. Gasket: BUNA-N ASTM D2000
8. Set Collar: Bronze C954
9. Wrench Nut: DI. ASTM A536 65-45-12

**Warranty:** A One Year warranty covers parts and labor for Equipment and Valves (Excluding Perishable Tooling and O-Rings) barring misuse or lack of routine maintenance.

**ILLINOIS**
800 Busse Road
Elk Grove Village, IL 60007
P: +1 847 364 3700
F: +1 847 364 8883

**ILLINOIS**
12601 South Homan Ave
Blue Island, IL 60406
P: +1 708 489 4901

www.AVTFittings.com AVT-Info@henkel.com

All marks used are trademarks and/or registered trademarks of Henkel and its affiliates in the U.S., Germany and elsewhere.© 2025 Henkel Corporation. All rights reserved.

Henkel

Henkel Adhesive Technologies